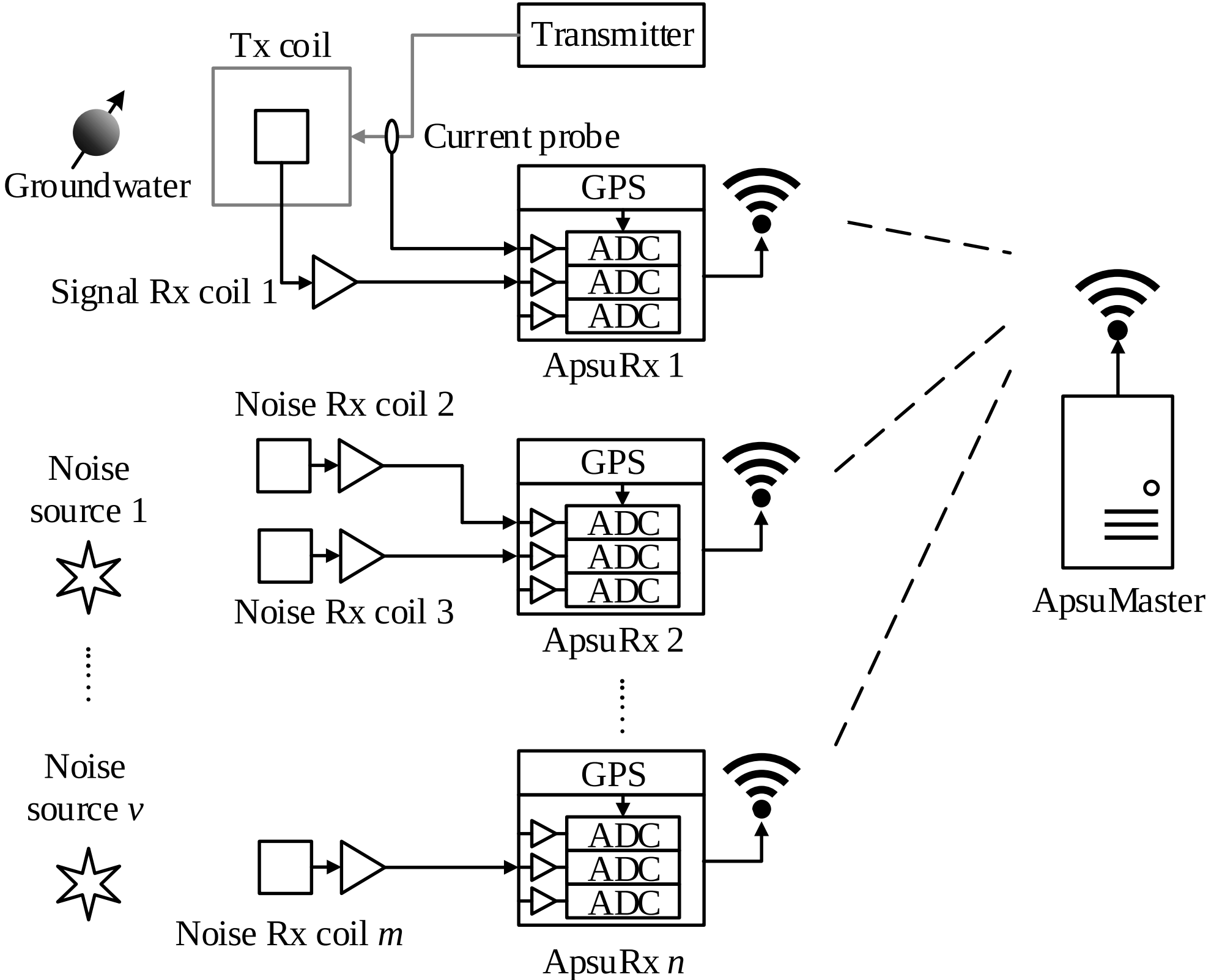
Transmitter
Tx coil
Current probe
Groundwater
GPS
ADC
ADC
ADC
Signal Rx coil 1
ApsuRx 1
Noise Rx coil 2
Noise source 1
GPS
ADC
ADC
ADC
Noise Rx coil 3
ApsuRx 2
ApsuMaster
Noise source v
GPS
ADC
ADC
ADC
Noise Rx coil m
ApsuRx n