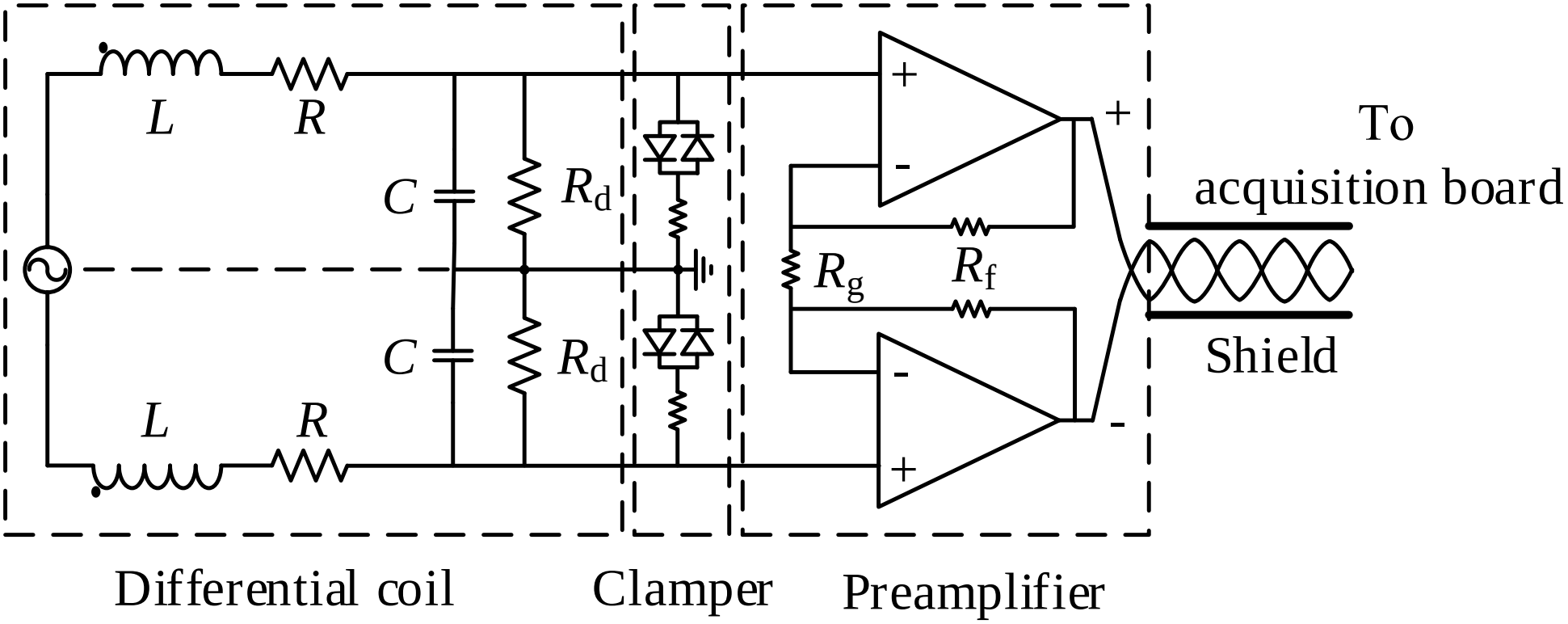
L
R
C
Rd
C
Rd
L
R
+
-
+
-
Rg
Rf
+
-
To
acquisition board
Shield
Differential coil
Clamper
Preamplifier