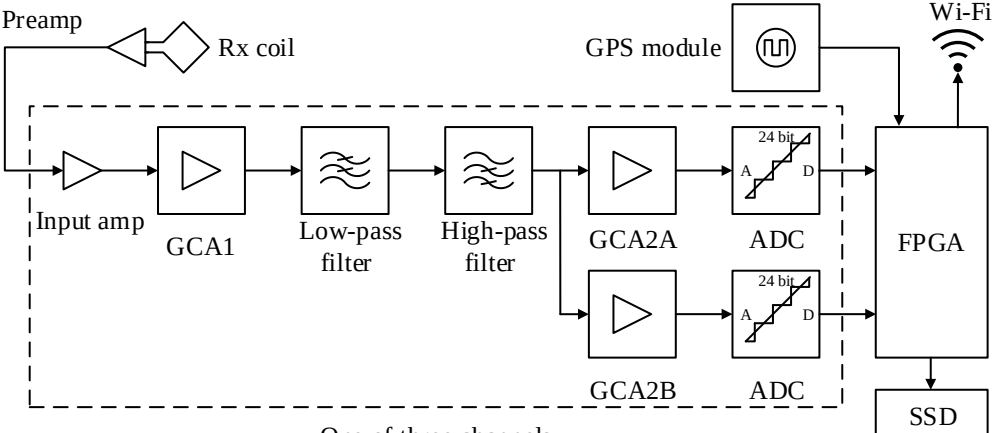
Preamp
Rx coil
GPS module
Wi-Fi
Input amp
GCA1
Low-pass filter
High-pass filter
GCA2A
ADC
24 bit
A
D
GCA2B
ADC
24 bit
A
D
FPGA
SSD
One of three channels