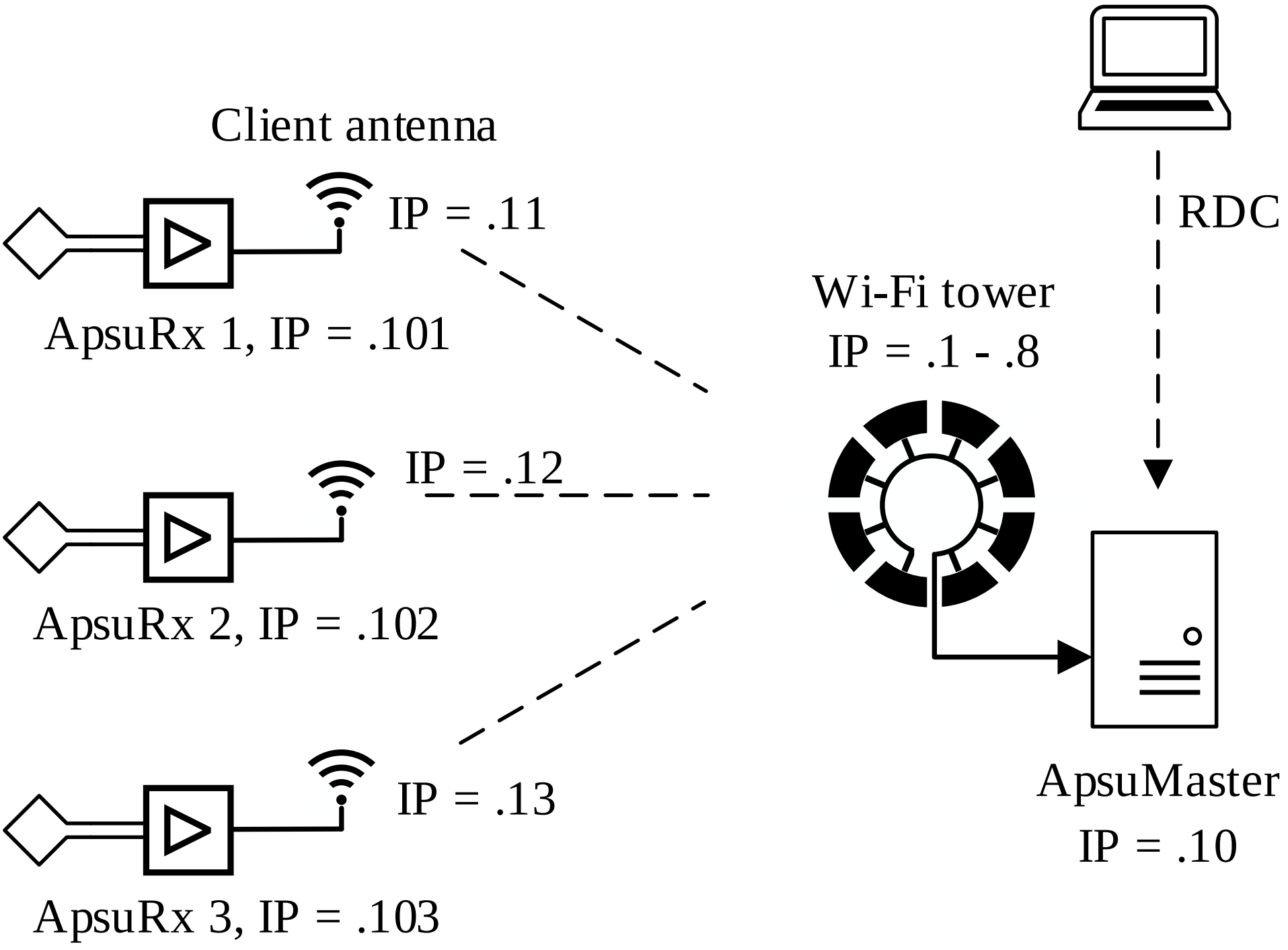
Client antenna
IP = .11
ApsuRx 1, IP = .101
IP = .12
ApsuRx 2, IP = .102
IP = .13
ApsuRx 3, IP = .103
Wi-Fi tower
IP = .1 - .8
RDC
ApsuMaster
IP = .10